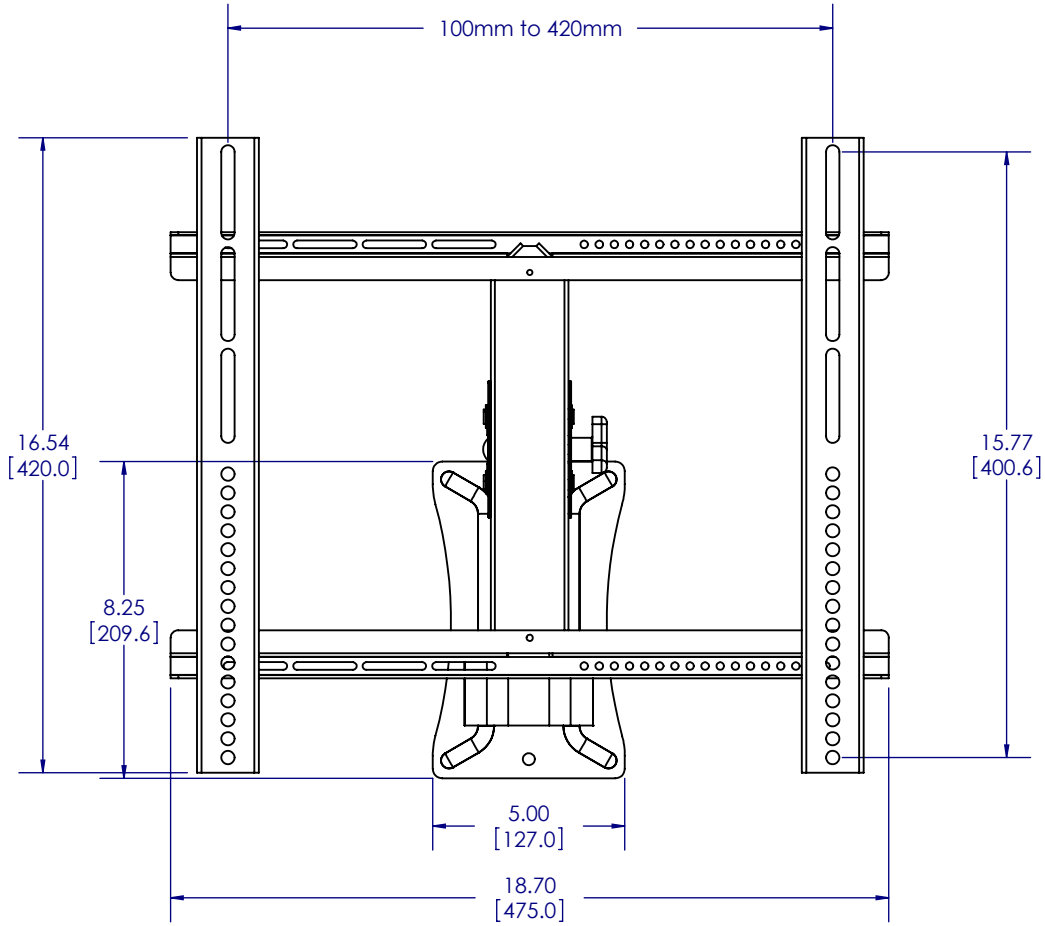

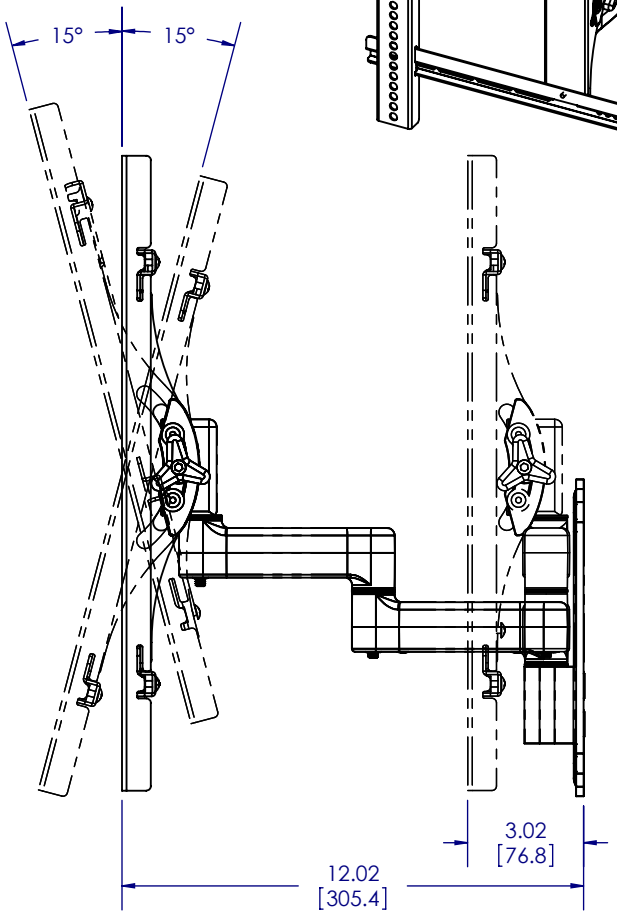

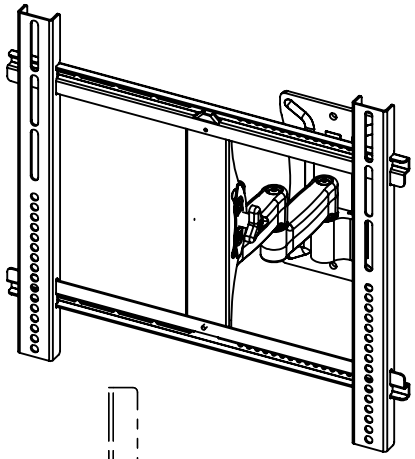

PROPRIETARY AND CONFIDENTIAL

THE INFORMATION CONTAINED IN THIS DRAWING IS THE SOLE PROPERTY OF SANUS SYSTEMS, A PRODUCT DIVISION OF MILESTONE AV TECHNOLOGIES. ANY REPRODUCTION IN PART OR AS A WHOLE WITHOUT THE WRITTEN PERMISSION OF SANUS SYSTEMS IS PROHIBITED.

专有且机密资料

本信息属 *SANUS SYSTEMS* 公司专属财产，非经 *SANUS SYSTEMS* 书面许可，严禁复制其中任任何内容

	NAME 姓名	DATE 日期
ENGINEER工程师	JBURES	11/17/2010
DESIGNER设计师	RAH	11/17/2010
APPROVED批准	JAS	11/17/2010

NOTES注释：

in[mm]

SANUS™ VUEPOINT

DESCRIPTION 描述： F215

SIZE尺寸	DWG. NO. 图纸编号	REV修订
A	F215	00

TEMPLATE REV 模板修订版： 06

SHEET 1 OF第 1

5 4 3 2 1