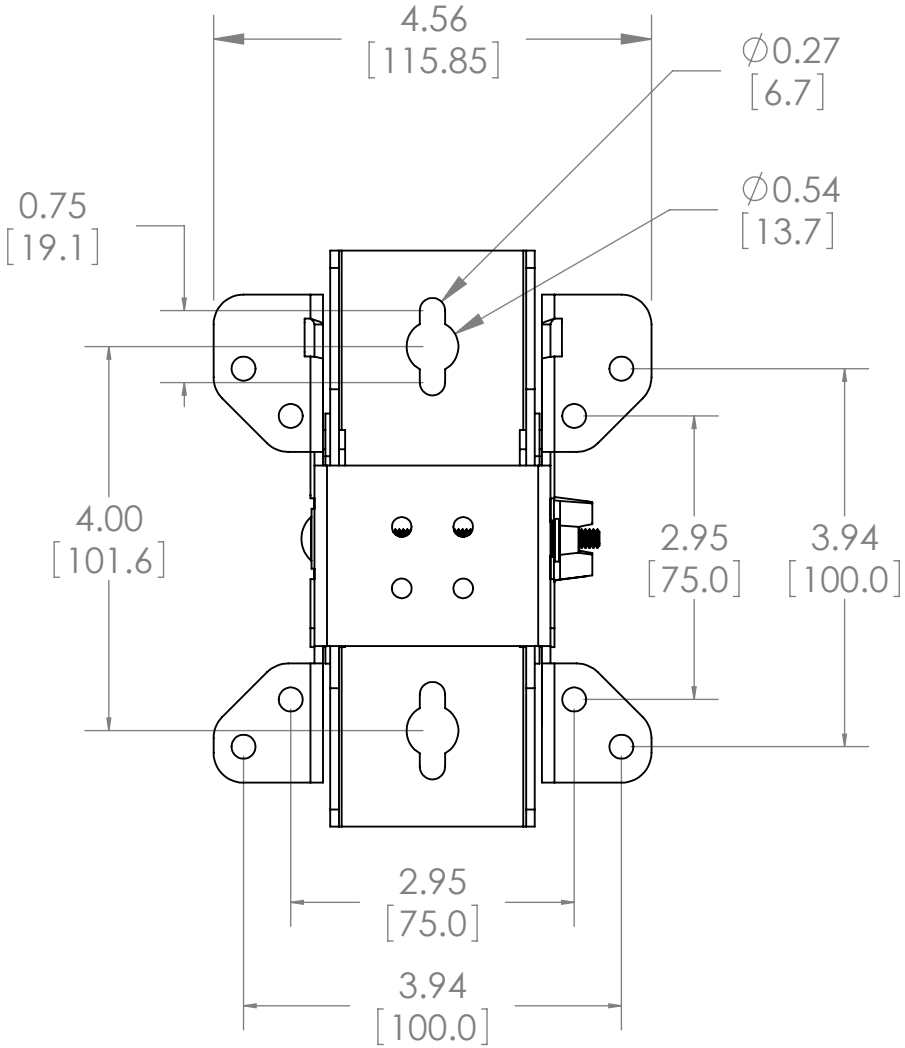

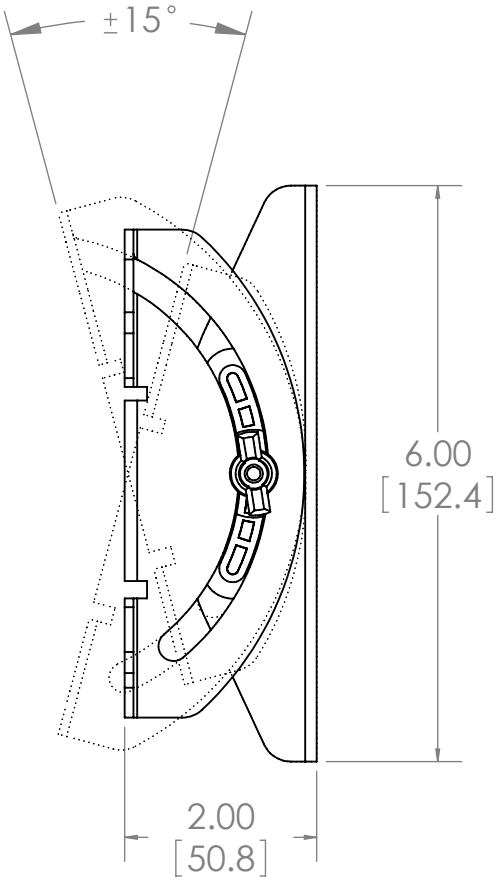

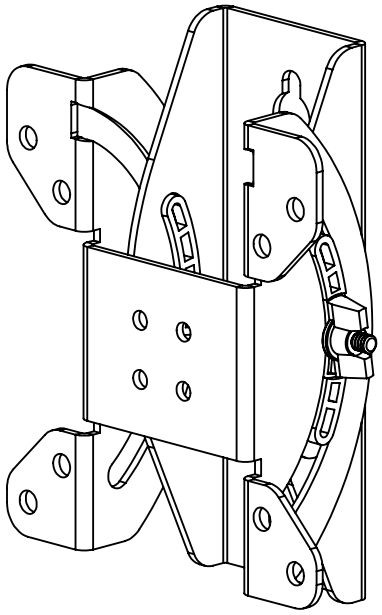

MAXIMUM WEIGHT CAPACITY: 50 lbs.

MOUNTING PATTERN VESA 75 & 100

IN [MM]

THE INFORMATION CONTAINED IN THIS DRAWING IS THE SOLE PROPERTY OF SANUS SYSTEMS, A PRODUCT DIVISION OF MILESTONE AV TECHNOLOGIES. ANY REPRODUCTION IN PART OR AS A WHOLE WITHOUT THE WRITTEN PERMISSION OF

	NAME	DATE
ENGINEER	RAH	7/29/08
DESIGNER	No	No
APPROVED	No	No

NOTES:

TILT
WALL MOUNT

SANUS SYSTEMS

TITLE:

FPM10

TEMPLATE REV.: 05

SHEET 1 OF 1

5 4 3 2 1