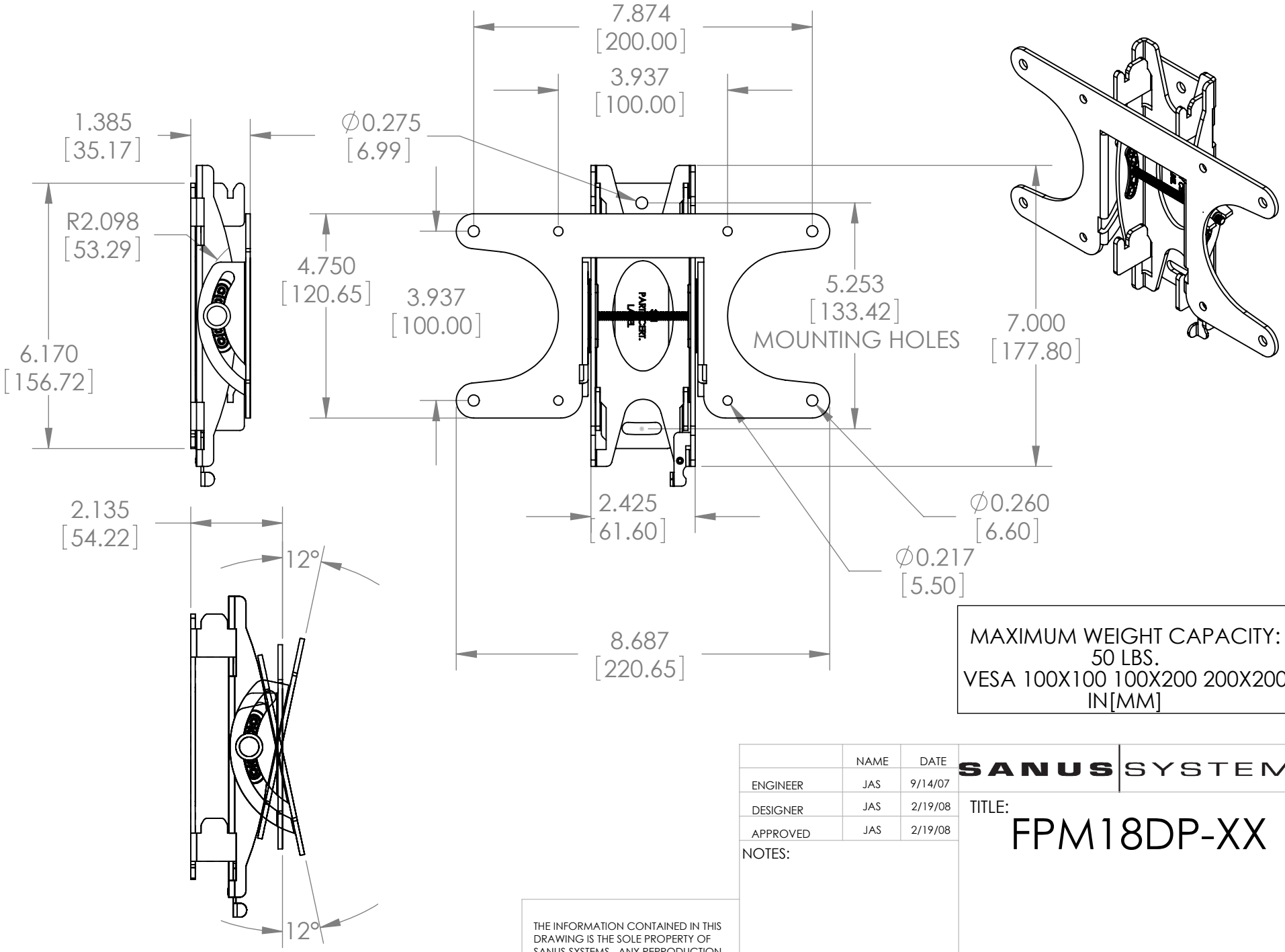


MAXIMUM WEIGHT CAPACITY:
50 LBS.
VESA 100X100 100X200 200X200
IN[MM]

| | NAME | DATE |
|---|---|---|
| ENGINEER | JAS | 9/14/07 |
| DESIGNER | JAS | 2/19/08 |
| APPROVED | JAS | 2/19/08 |

NOTES:

SANUS SYSTEMS

TITLE:

# FPM18DP-XX

THE INFORMATION CONTAINED IN THIS DRAWING IS THE SOLE PROPERTY OF SANUS SYSTEMS. ANY REPRODUCTION IN PART OR AS A WHOLE WITHOUT THE WRITTEN PERMISSION OF SANUS SYSTEMS IS PROHIBITED.

TEMPLATE REV.: 04

SHEET 1 OF 1

5 4 3 2 1